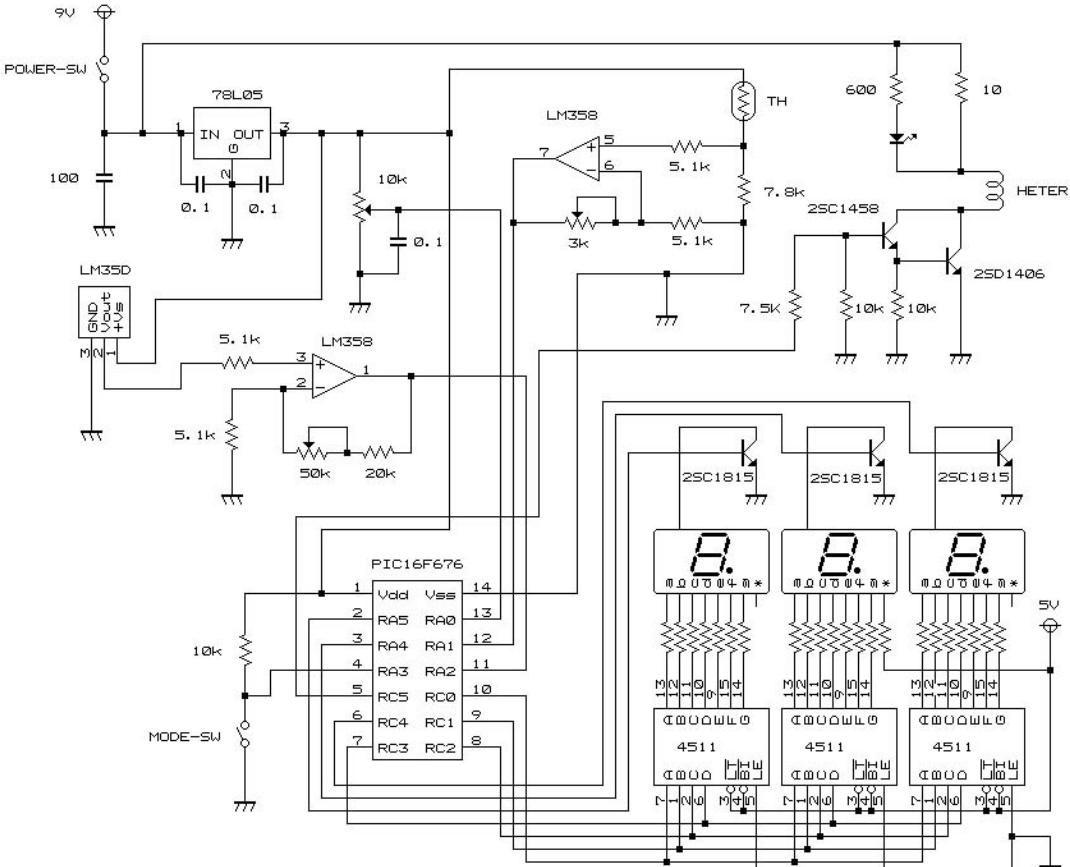

Copyright(C) 2009 NIPS Technical Division. All Rights Reserved.